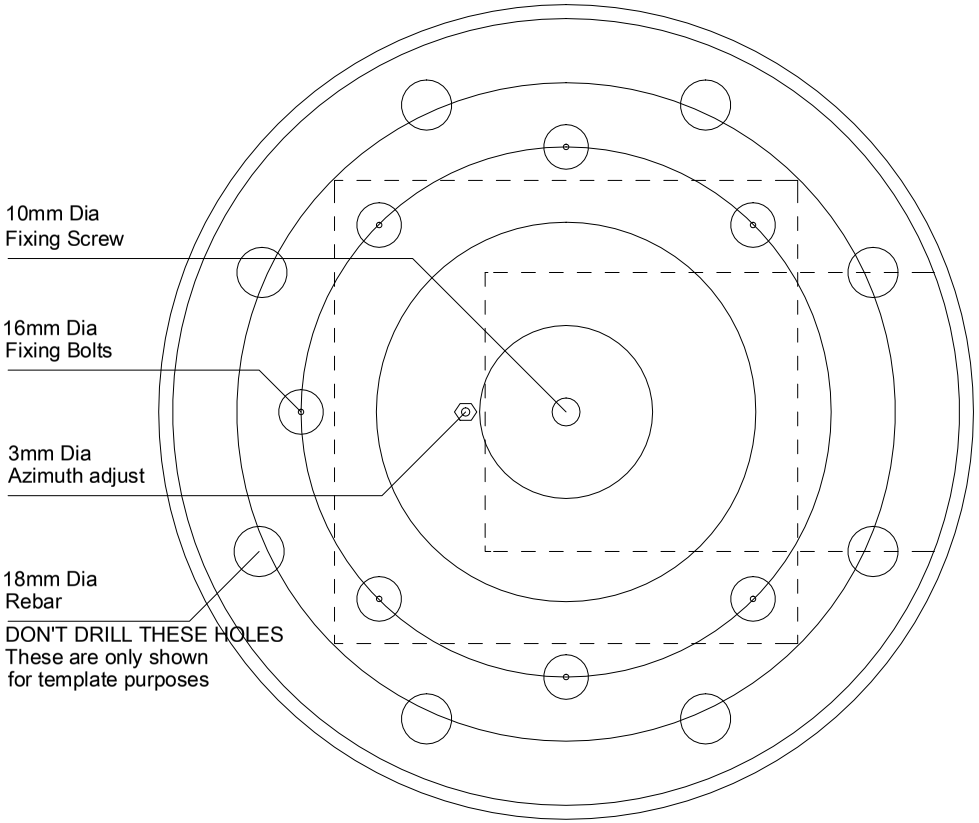
10mm Dia
Fixing Screw
16mm Dia
Fixing Bolts
3mm Dia
Azimuth adjust
18mm Dia
Rebar
DON'T DRILL THESE HOLES
These are only shown
for template purposes

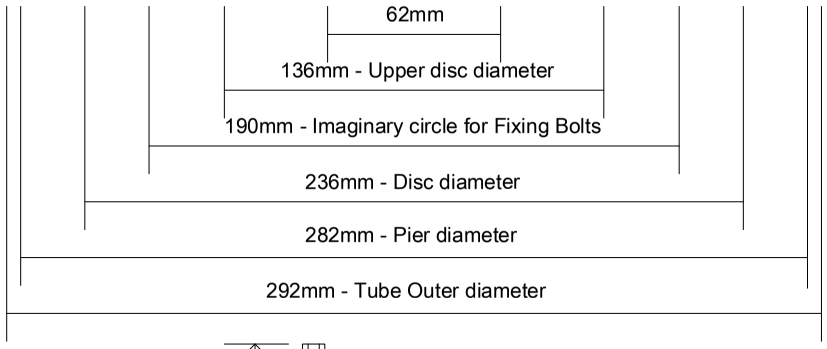
62mm
136mm - Upper disc diameter
190mm - Imaginary circle for Fixing Bolts
236mm - Disc diameter
282mm - Pier diameter
292mm - Tube Outer diameter

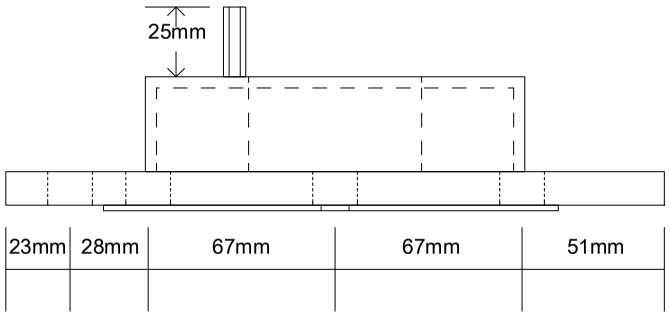
25mm
23mm
28mm
67mm
67mm
51mm

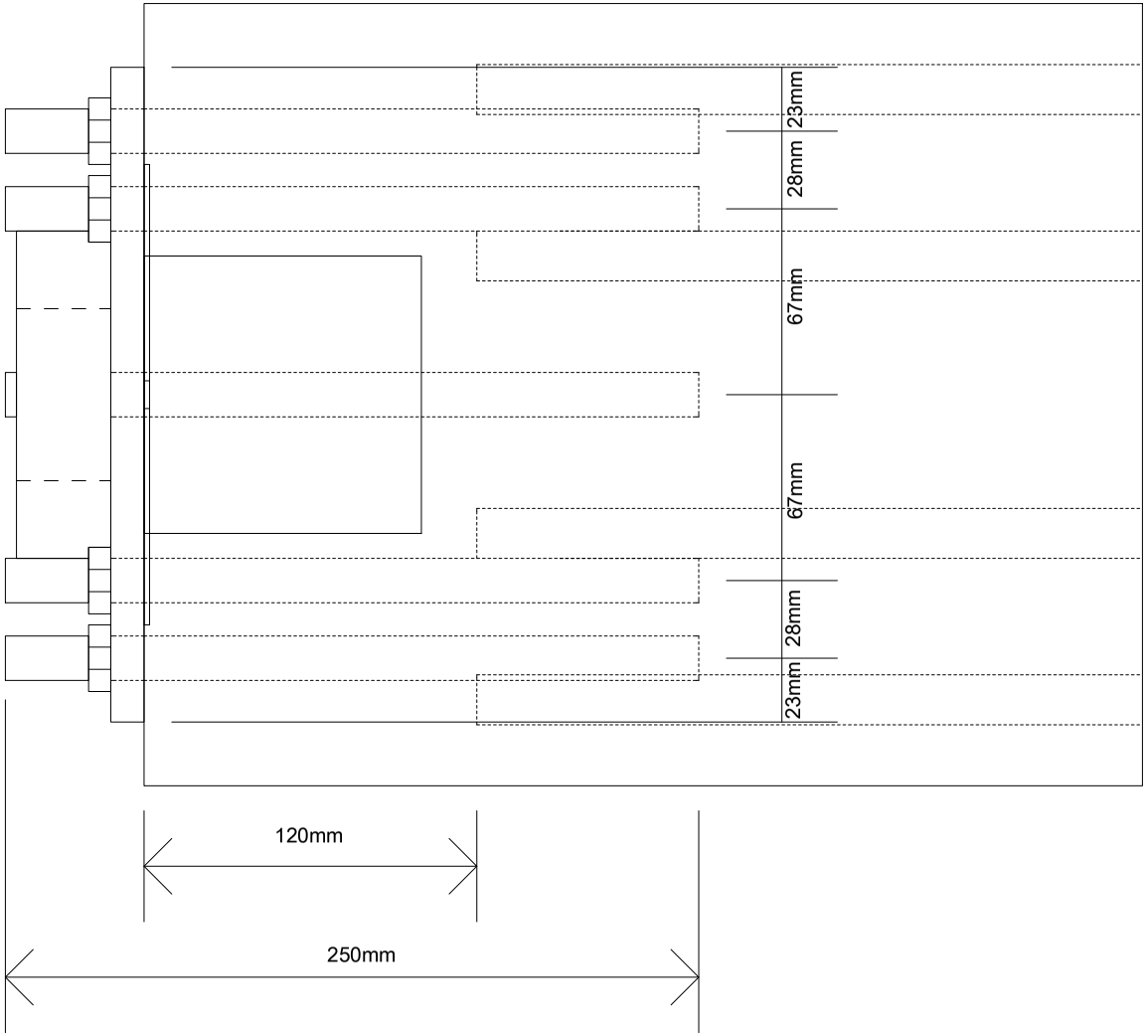
23mm
28mm
67mm
67mm
28mm
23mm
120mm
250mm