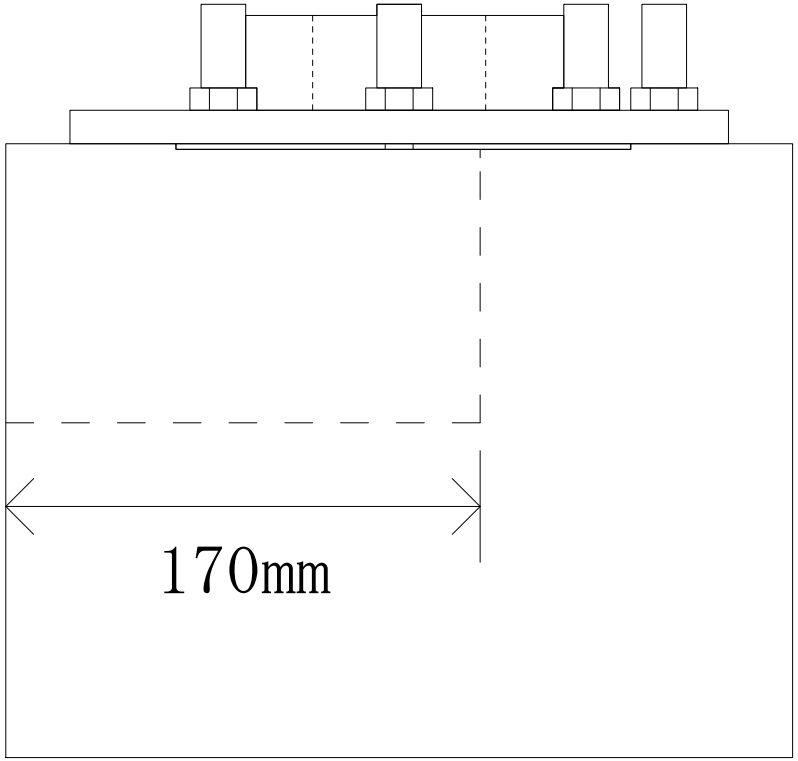
170mm

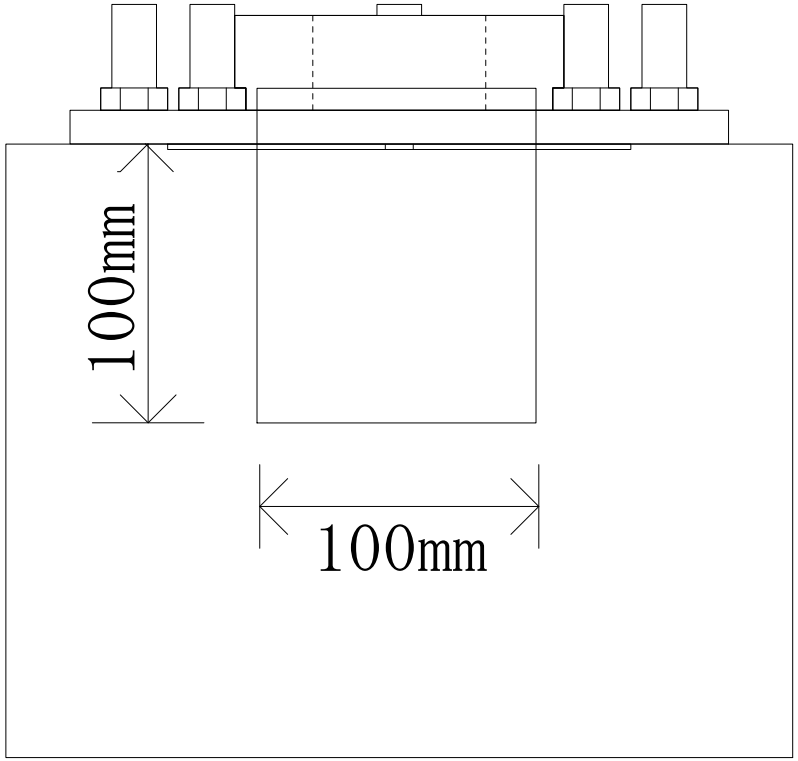
100mm
100mm