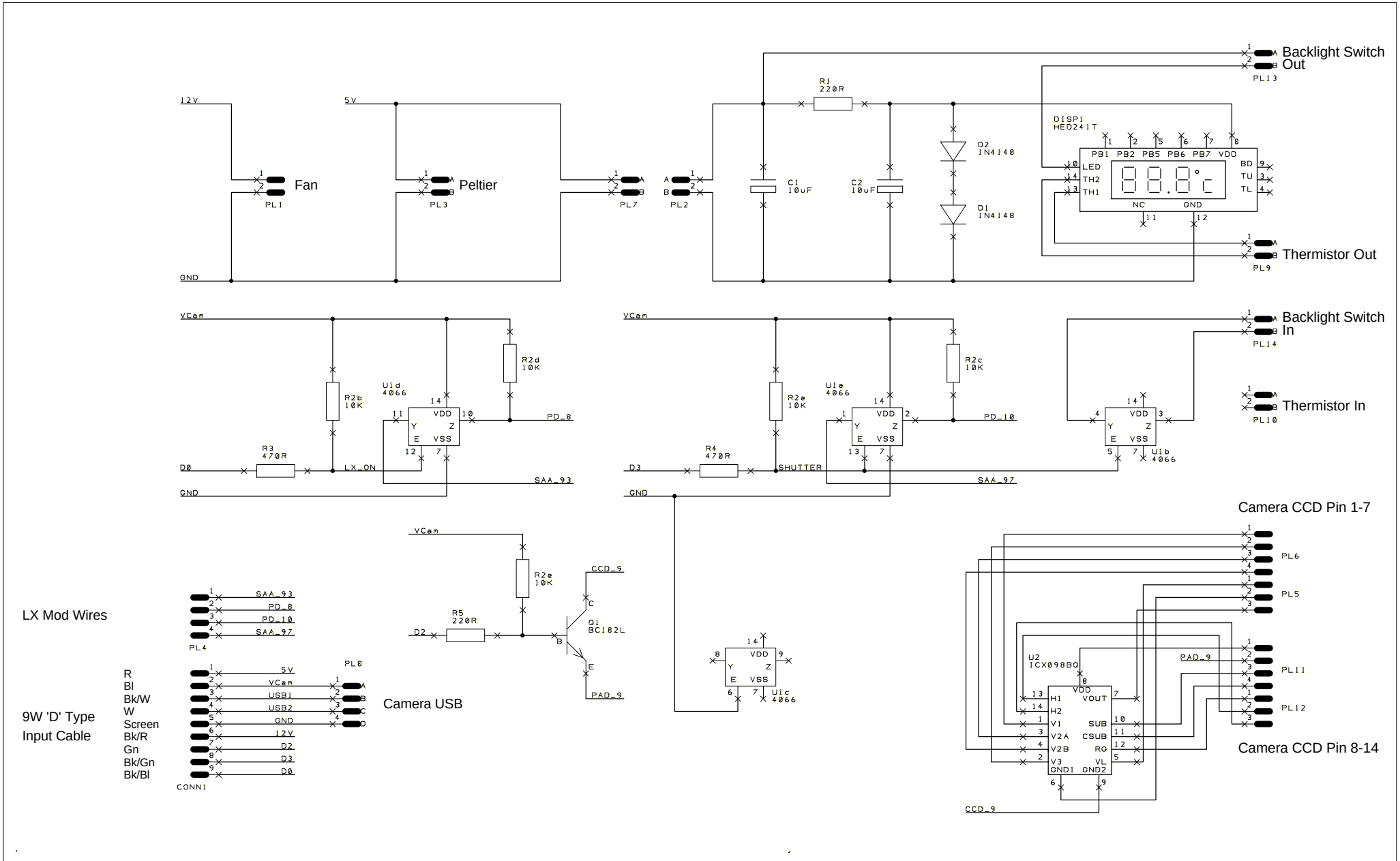
12V
5V
GND
Fan
PL1
Peltier
PL3
PL7
PL2
R1
220R
C1
10uF
C2
10uF
D2
1N4148
D1
1N4148
DISP1
HED241T
PB1 PB2 PB5 PB6 PB7 VDD
LED
TH2
TH1
BD
TU
TL
NC
GND
Backlight Switch Out
PL13
Thermistor Out
PL9
VCam
R2b
10K
R2d
10K
U1d
4066
VDD
Y
Z
E
VSS
PD_8
R3
470R
D0
LX_ON
SAA_93
R2a
10K
R2c
10K
U1a
4066
PD_10
R4
470R
D3
SHUTTER
SAA_97
U1b
4066
Backlight Switch In
PL14
Thermistor In
PL10
LX Mod Wires
SAA_93
PD_8
PD_10
SAA_97
PL4
9W 'D' Type
Input Cable
R
Bl
Bk/W
W
Screen
Bk/R
Gn
Bk/Gn
Bk/Bl
5V
VCam
USB1
USB2
GND
12V
D2
D3
D0
CONN1
PL8
Camera USB
R2e
10K
R5
220R
CCD_9
Q1
BC182L
PAD_9
U1c
4066
Camera CCD Pin 1-7
PL6
PL5
U2
ICX098BQ
H1
H2
V1
V2A
V2B
V3
GND1
VDD
VOUT
SUB
CSUB
RG
VL
GND2
PAD_9
PL11
PL12
Camera CCD Pin 8-14
CCD_9